# AG-Series

## Agricultural Couplings

The Right Connection®

### Applications
- Mobile equipment, snow plows, and agricultural machinery

### Sizes
- 1/4" to 1"

### Features
- Available with poppet or ball valve
- Couplers have a PTFE anti-extrusion ring
- Poppet valve seals crimped in place to maintain integrity during excessive flow conditions and pressurized connections
- Steel componentry is plated using RoHS Compliant Trivalent Chrome
- Steel coupler sleeves are hardened to resist deformation and maximize service life
- Steel plugs are hardened to provide heavy duty performance and resist brinelling
- Stainless steel balls, retaining rings, and springs maximize corrosion resistance and extend service life
- Push-pull sleeve option
- 1/2" body connect under pressure plug available

### Materials
- Body: Steel
- Dust caps and plugs: Elastomer

### Interchange Data
- Agricultural Interchange
- Parker/Pioneer 4000 Series
- Faster NS/NV-Series
- Safeway Series-S20
- Stucchi IR-Series

### Standards
- ISO7241 'A' (1/2" only)
- ISO5675 (3/4" only)

### Specifications
- NPTF, BSPP, and ORB threads
- Nitrile rubber seals are standard
- Temperature range **-40°F (-40°C)** to **250°F (121°C)**

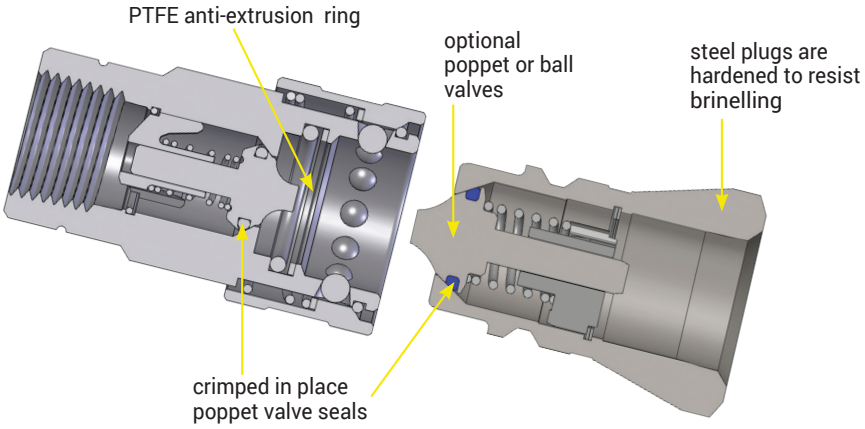



## Dixon Quick Coupling

2925 Chief Court
Dallas, NC 28034
ph: 800.839.8980 • 704.334.9175
fx: 800.839.9022 • 704.334.9002
dixonvalve.com

The Right Connection®

## John Deere Coupler x AG-Series Agricultural Interchange Poppet Valve Plug Adapter

| Body Size | Part Detail | | | Length | | Maximum O.D. | | Hex Inch |
|---|---|---|---|---|---|---|---|---|
| | Part # | Threads | Material | Inch | mm | Inch | mm | |
| 1/2" | 4JDAG4 | N/A | steel | 2.43 | 61.72 | 1.70 | 43.18 | N/A |

## AG-Series Agricultural Interchange Poppet Coupler X John Deere Plug Adapter

| Body Size | Part Detail | | | Length | | Maximum O.D. | | Hex Inch |
|---|---|---|---|---|---|---|---|---|
| | Part # | Threads | Material | Inch | mm | Inch | mm | |
| 1/2" | 4AGJD4 | N/A | steel | 2.38 | 60.45 | 1.49 | 37.85 | N/A |

## AG-Series Agricultural Interchange Ball Valve Coupler X International Harvester Plug Adapter

| Body Size | Part Detail | | | Length | | Maximum O.D. | | Hex Inch |
|---|---|---|---|---|---|---|---|---|
| | Part # | Threads | Material | Inch | mm | Inch | mm | |
| 1/2" | 4AGIH4 | N/A | steel | 2.65 | 67.31 | 1.49 | 37.85 | N/A |

## John Deere Interchange Plug X Female Threads

| Body Size | Part Detail | | | Length | | Maximum O.D. | | Hex Inch |
|---|---|---|---|---|---|---|---|---|
| | Part # | Threads | Material | Inch | mm | Inch | mm | |
| 1/2" | JD4F4 | 1/2" – 14 NPTF | steel | 1.87 | 47.50 | 1.18 | 29.97 | 1-1/16" |
| 1/2" | JD4OF4 | 3/4" - 16 ORB | steel | 1.87 | 47.50 | 1.18 | 29.97 | 1-1/16" |

## International Harvester Interchange Plug X Female Threads

| Body Size | Part Detail | | | Length | | Maximum O.D. | | Hex Inch |
|---|---|---|---|---|---|---|---|---|
| | Part # | Threads | Material | Inch | mm | Inch | mm | |
| 1/2" | IH4F4 | 1/2" – 14 NPTF | steel | 2.75 | 69.85 | 1.25 | 31.75 | 1" |

## HT-AG-Series Flushface ISO16028 Coupler x ISO7241-A AG Plug Adapter

| Body Size | Part Detail | | Length | | Maximum O.D. | |
|---|---|---|---|---|---|---|
| | Part # | Material | inch | mm | inch | mm |
| 1/2" | 4HTAG4 | steel | 3.89 | 98.81 | 1.57 | 39.88 |

## HT-AG-Series ISO7241-A AG Coupler x ISO16028 Flushface Plug Adapter

| Body Size | Part Detail | | Length | | Maximum O.D. | |
|---|---|---|---|---|---|---|
| | Part # | Material | inch | mm | inch | mm |
| 1/2" | 4AGHT4 | steel | 4.15 | 105.41 | 1.51 | 38.35 |

© 2024 DVCC • AGSERIES_0224